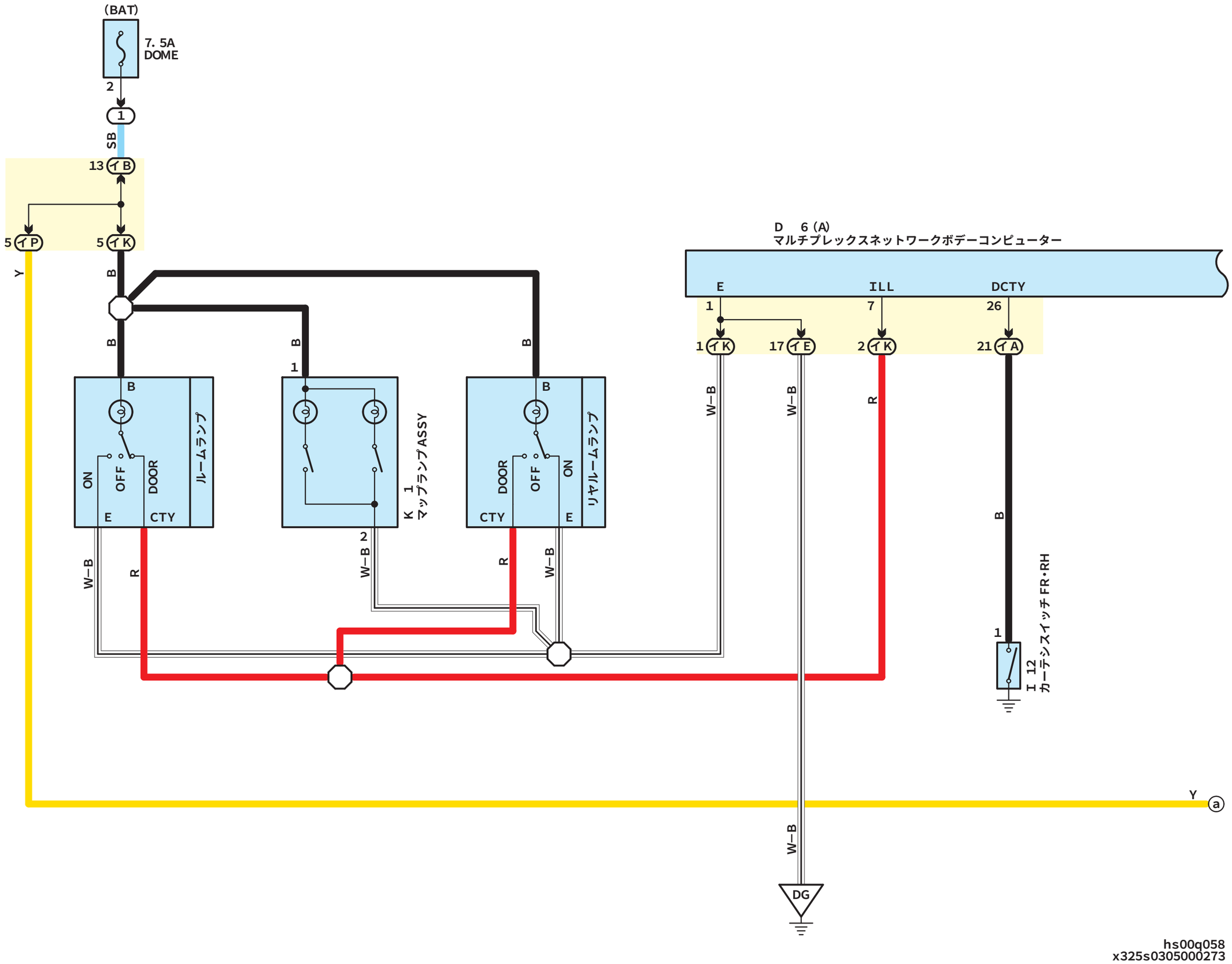

hs00q058
x325s0305000273

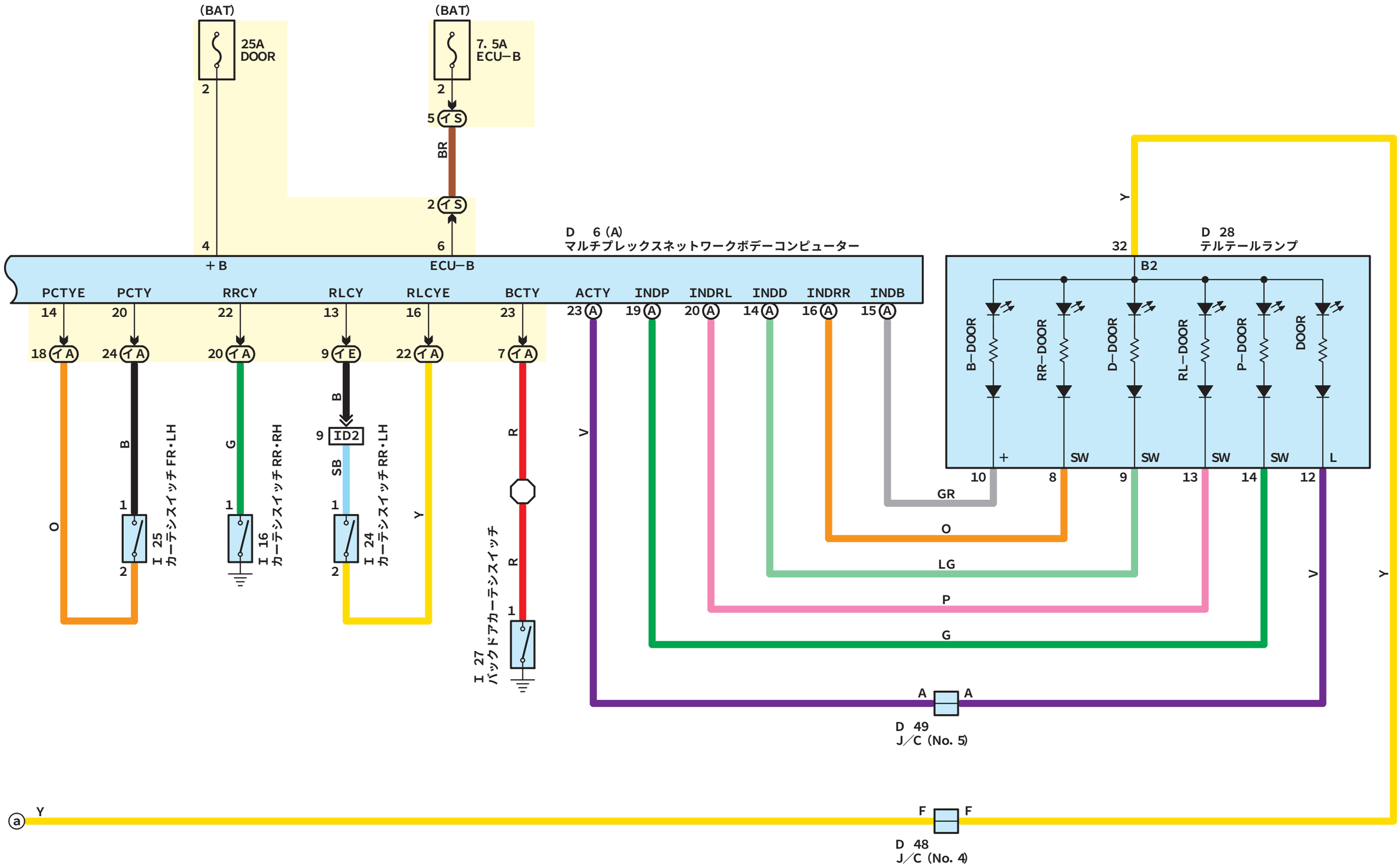

hs00q059
x325s0305000273