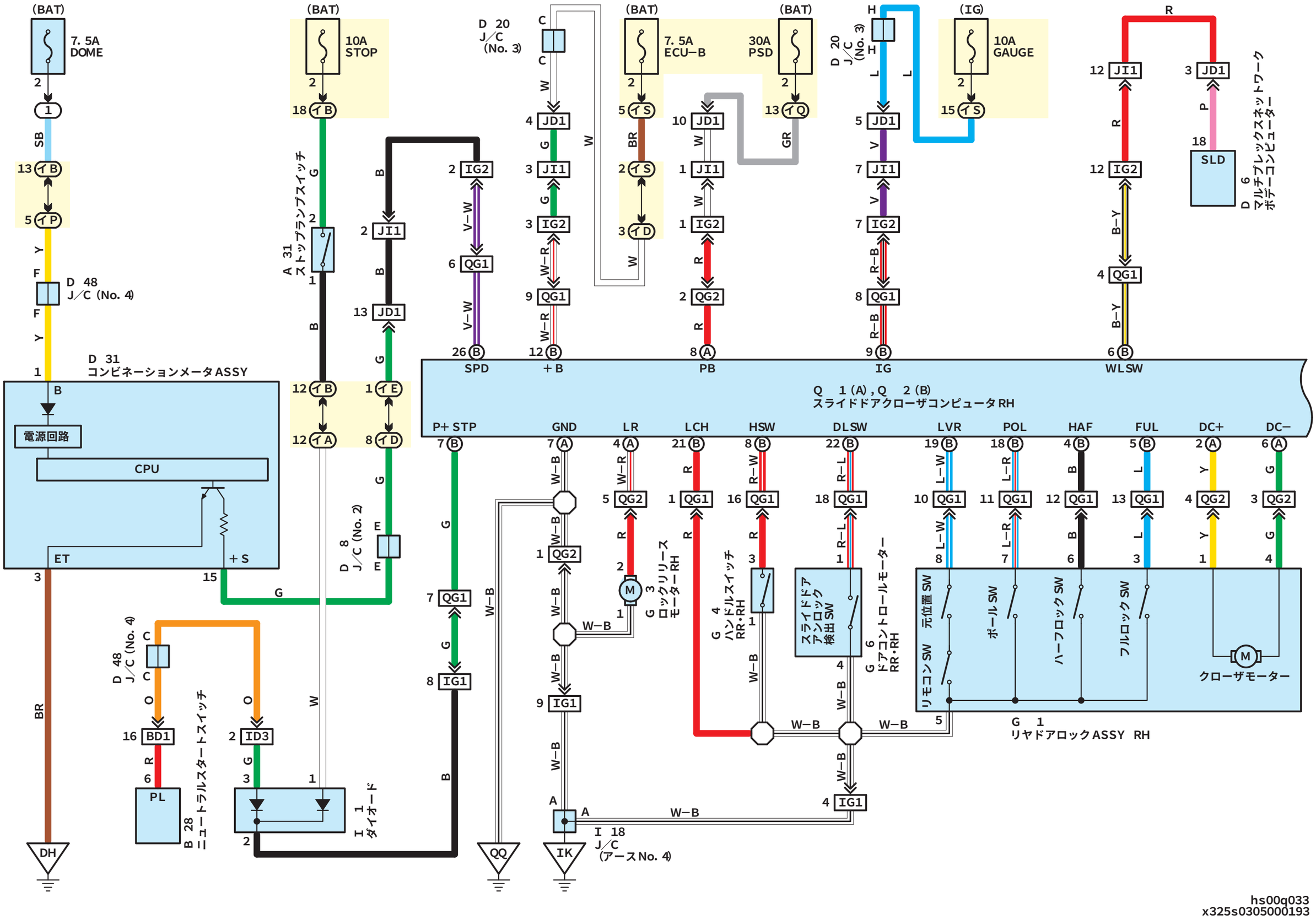

hs00q033
x325s0305000193

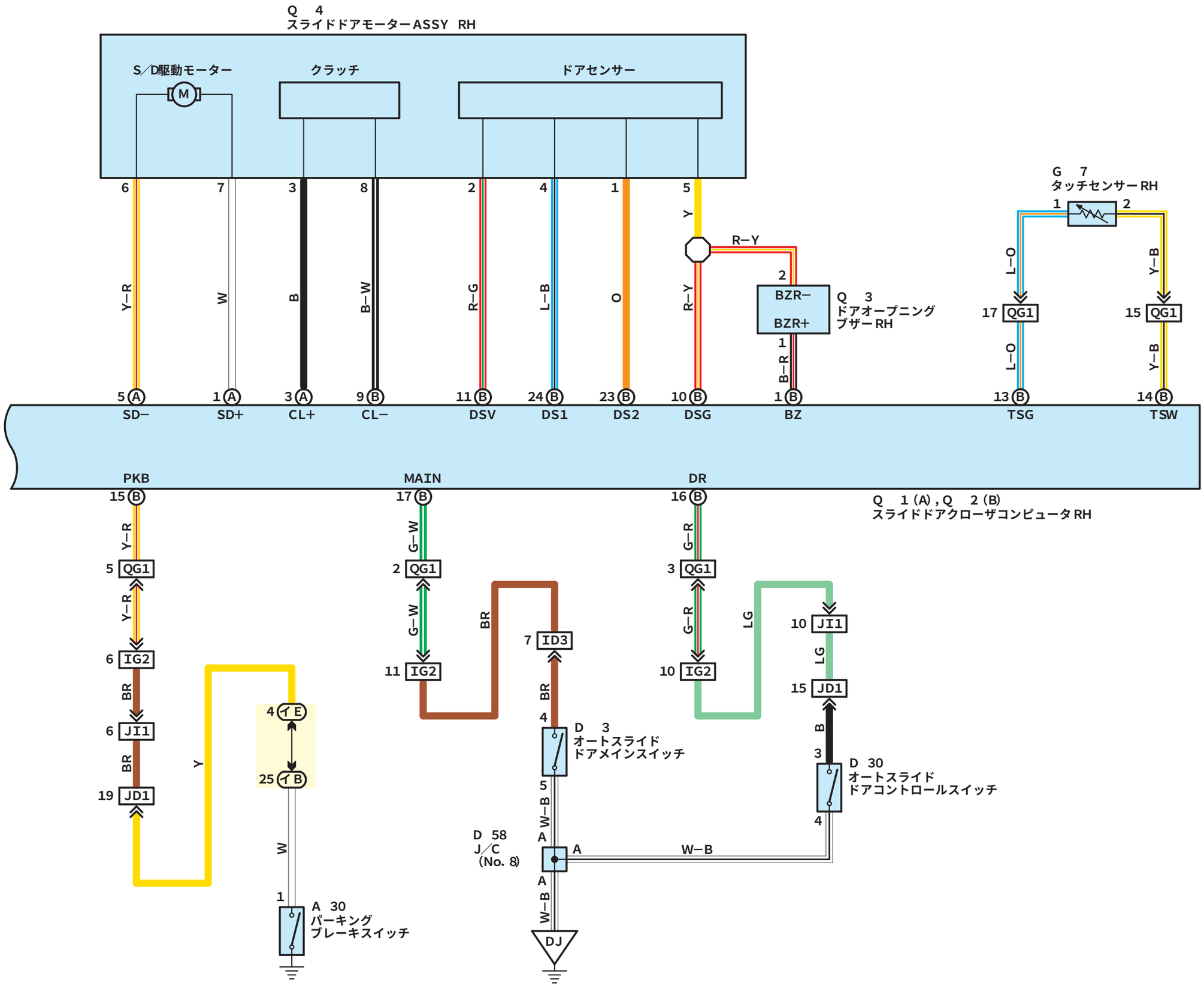

hs00q034
x325s0305000193