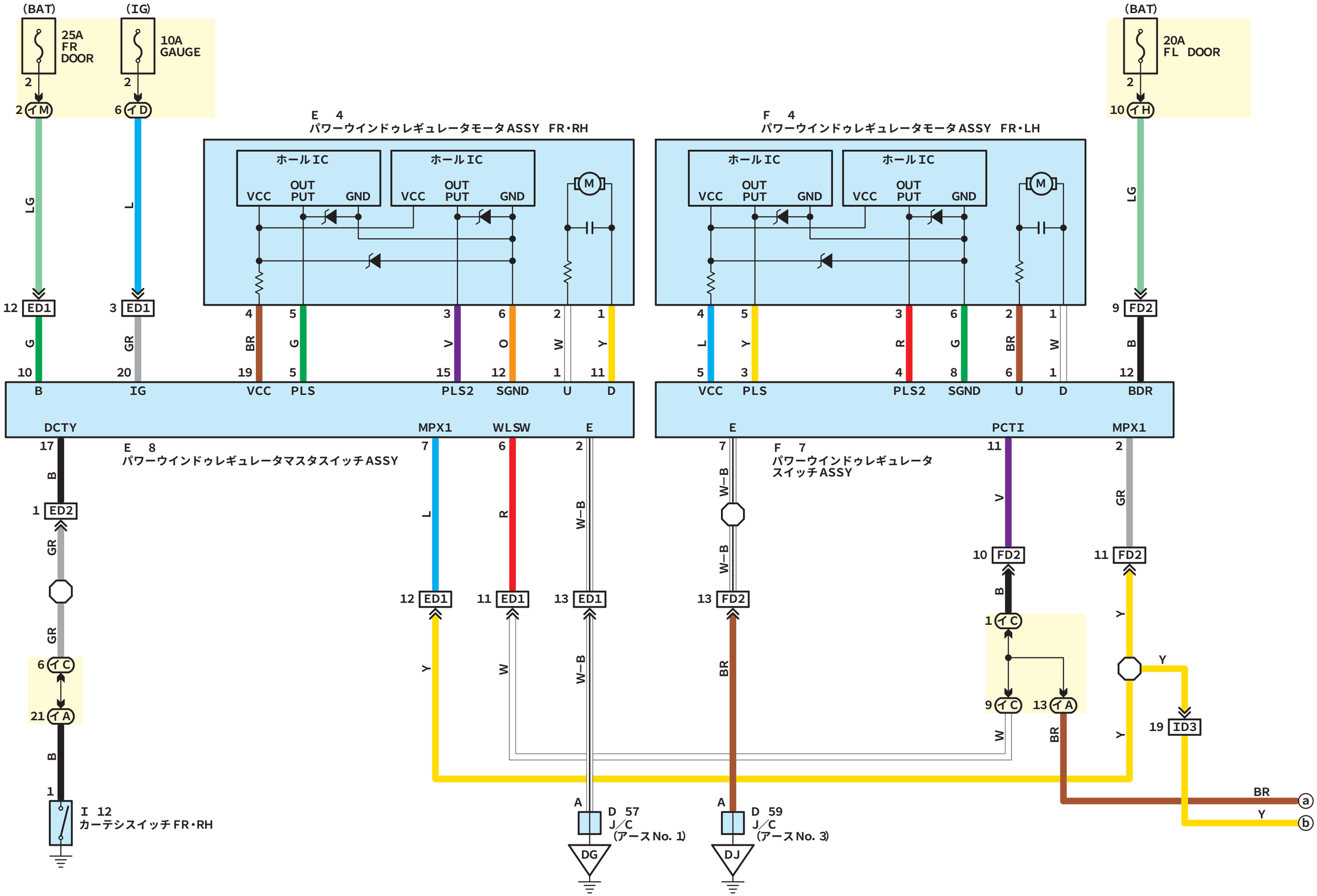

hs00q021
x325s0305000183

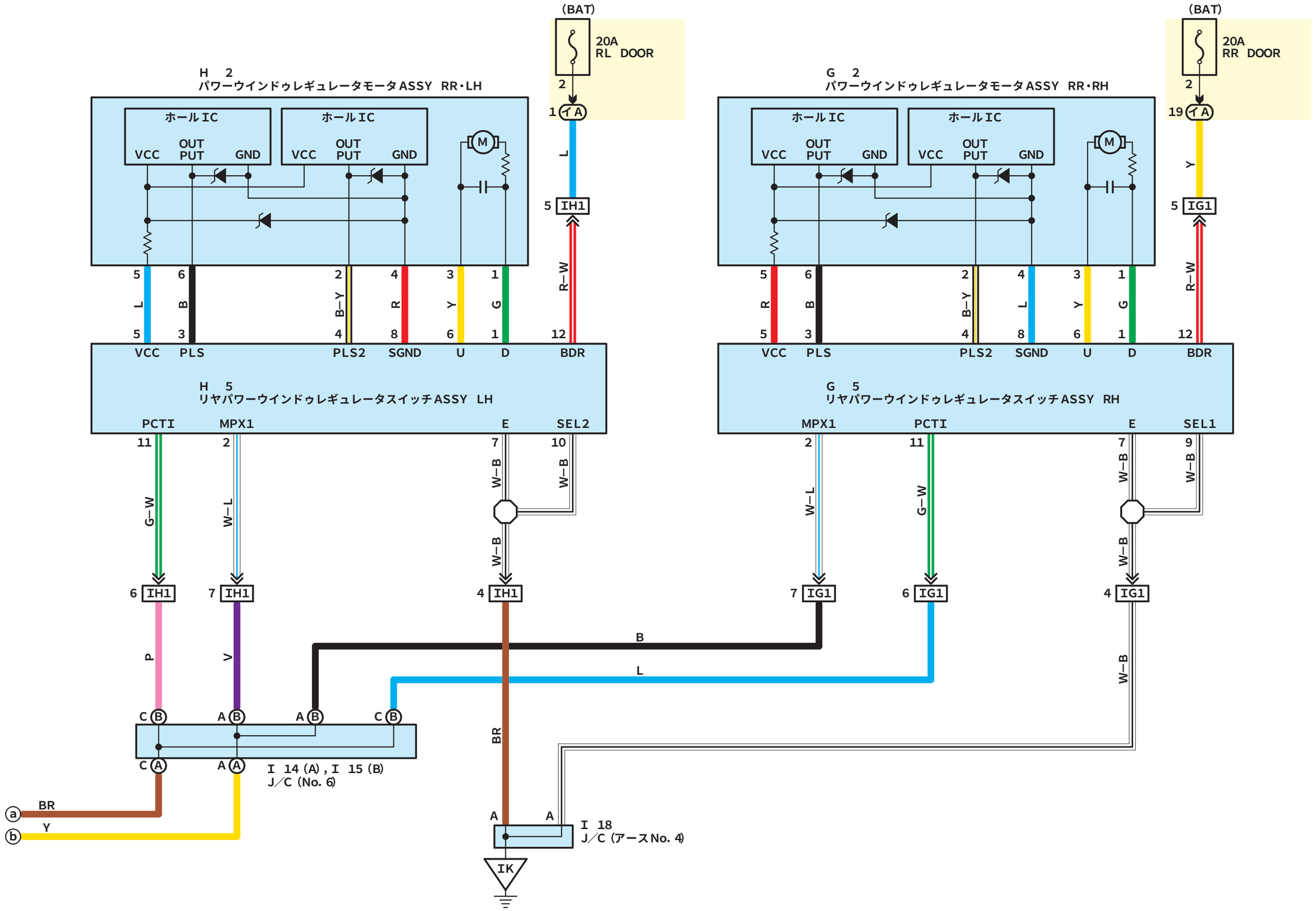

hs00q022
x325s0305000183