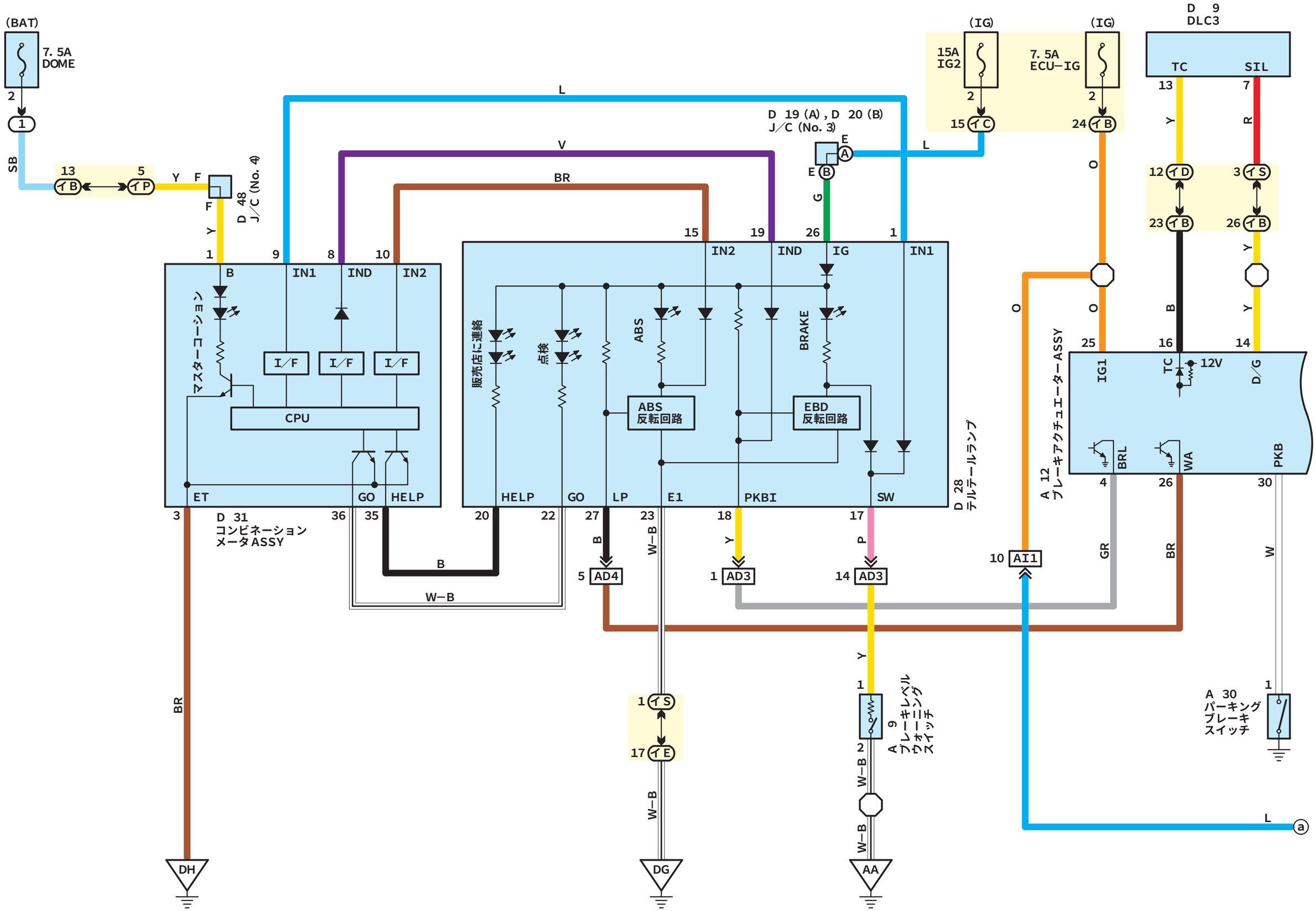

hs00q012
x325s0305000083

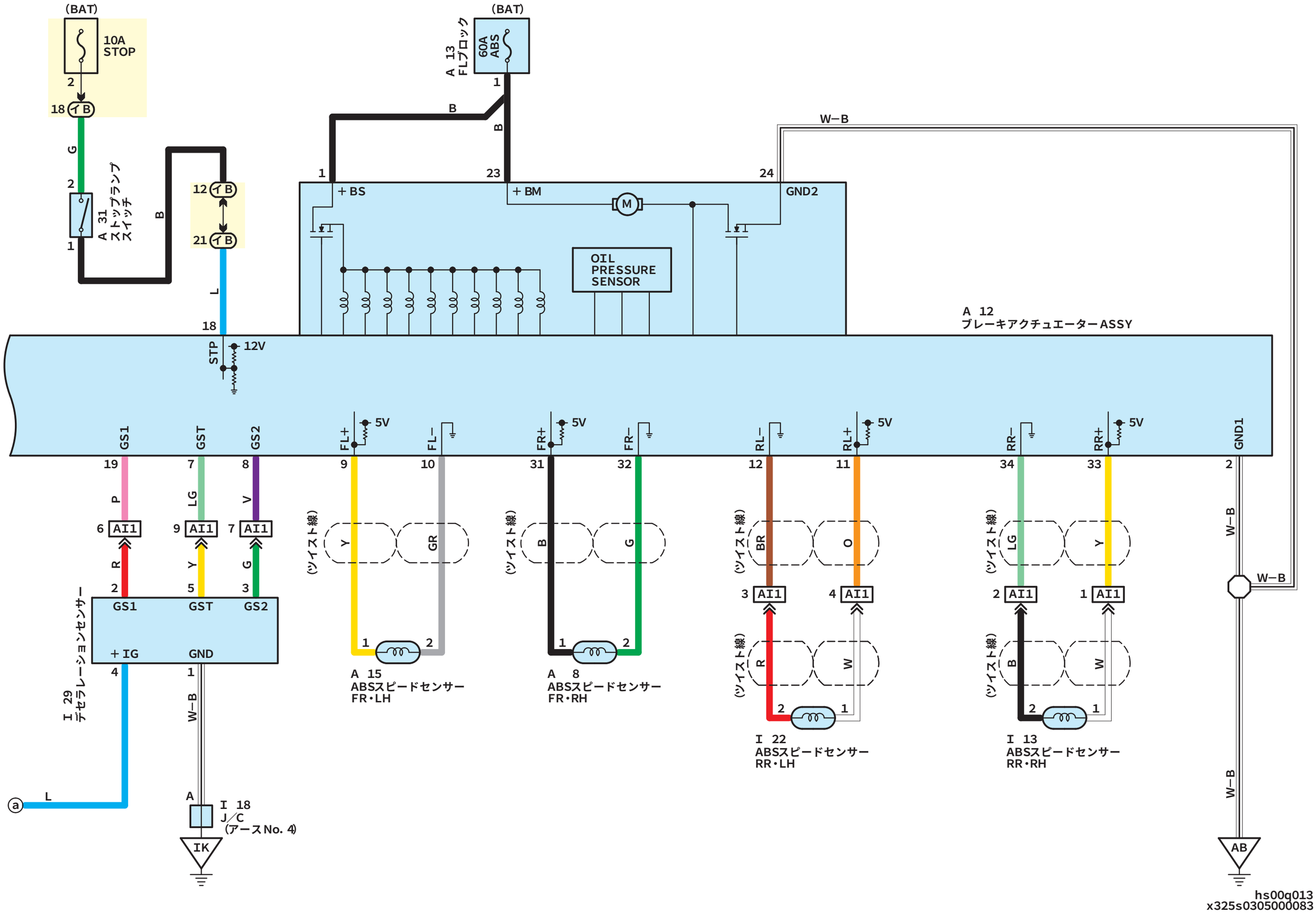

hs00q013
x325s0305000083