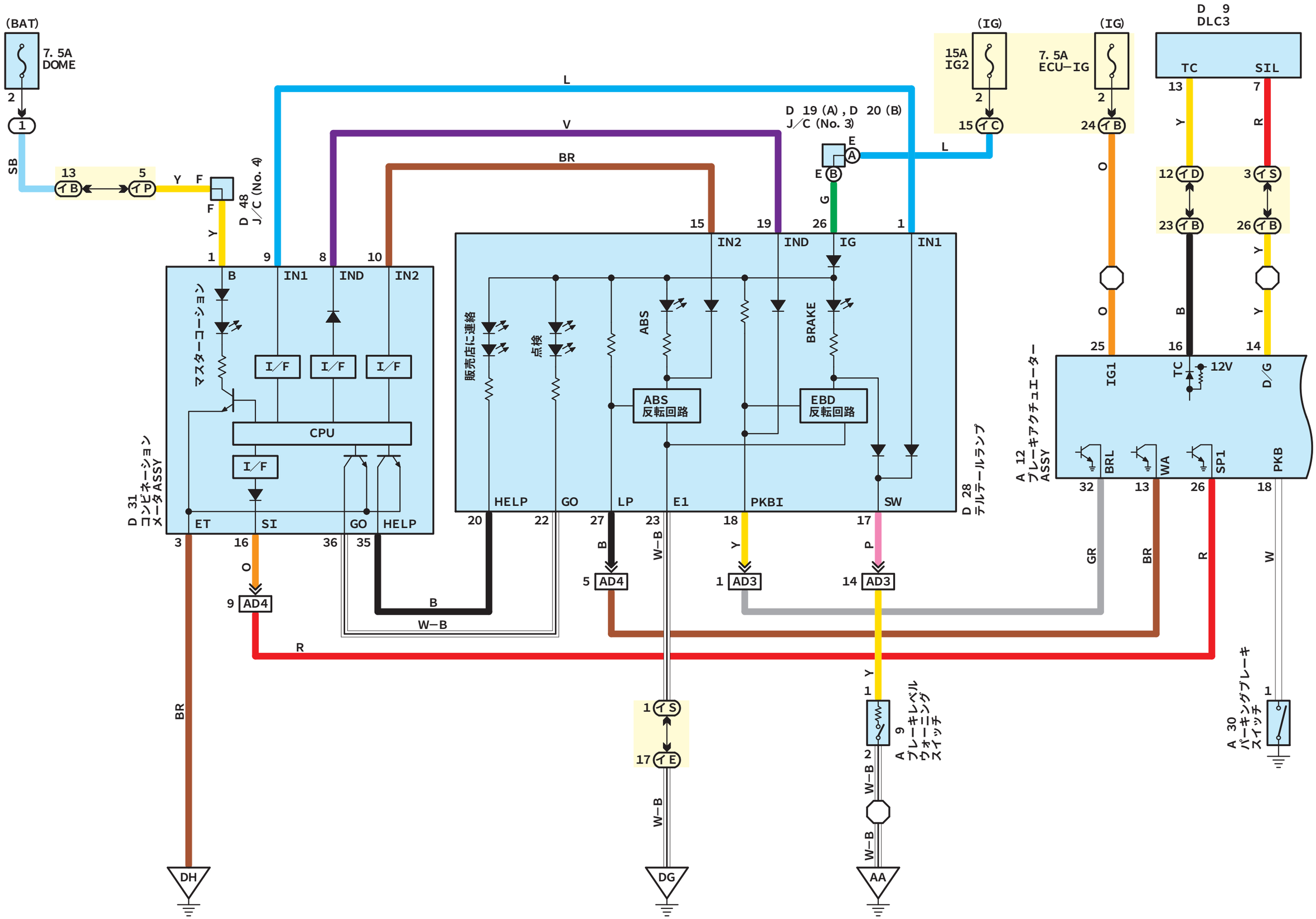

hs00q010
x325s0305000073

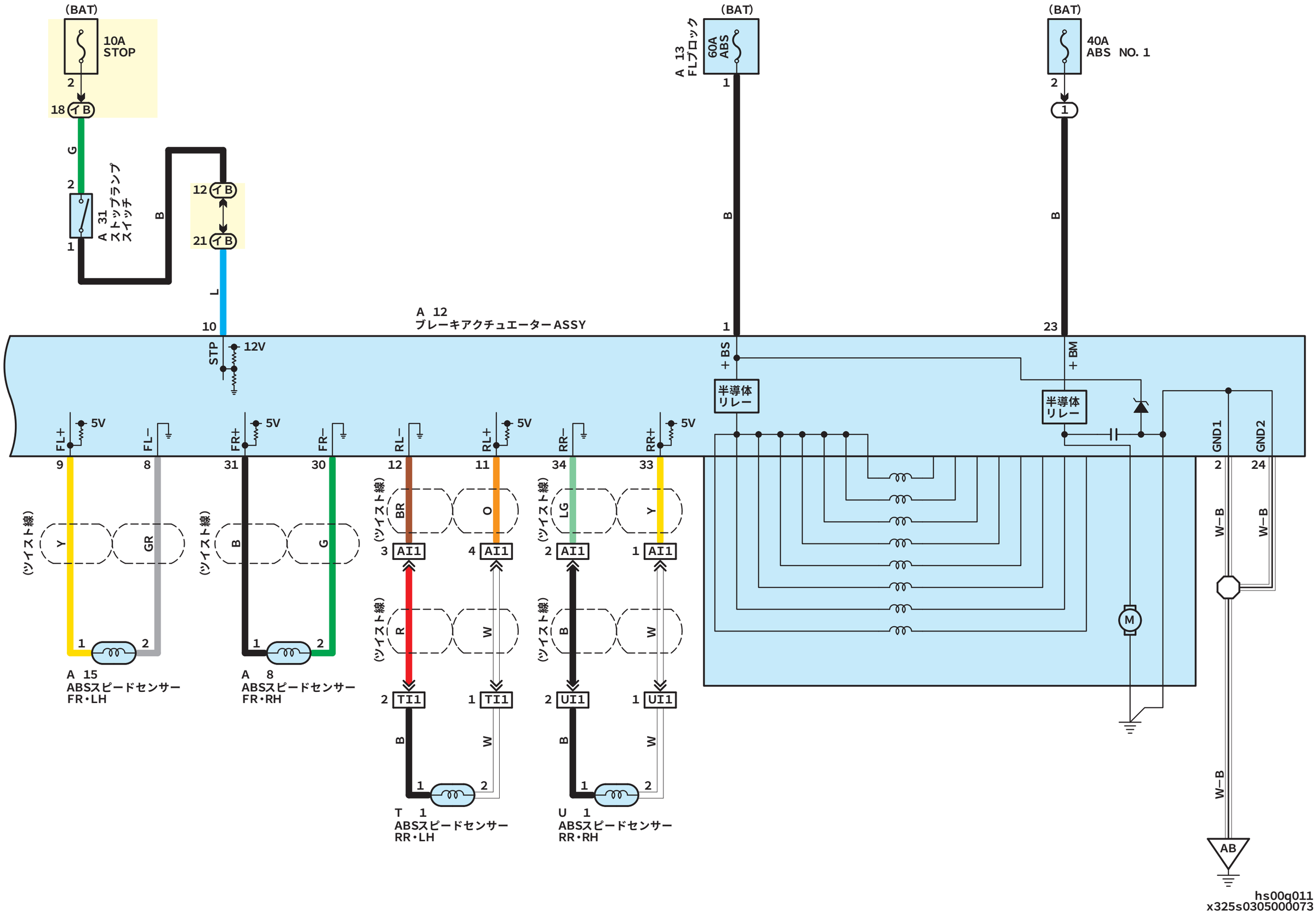

hs00q011
x325s0305000073