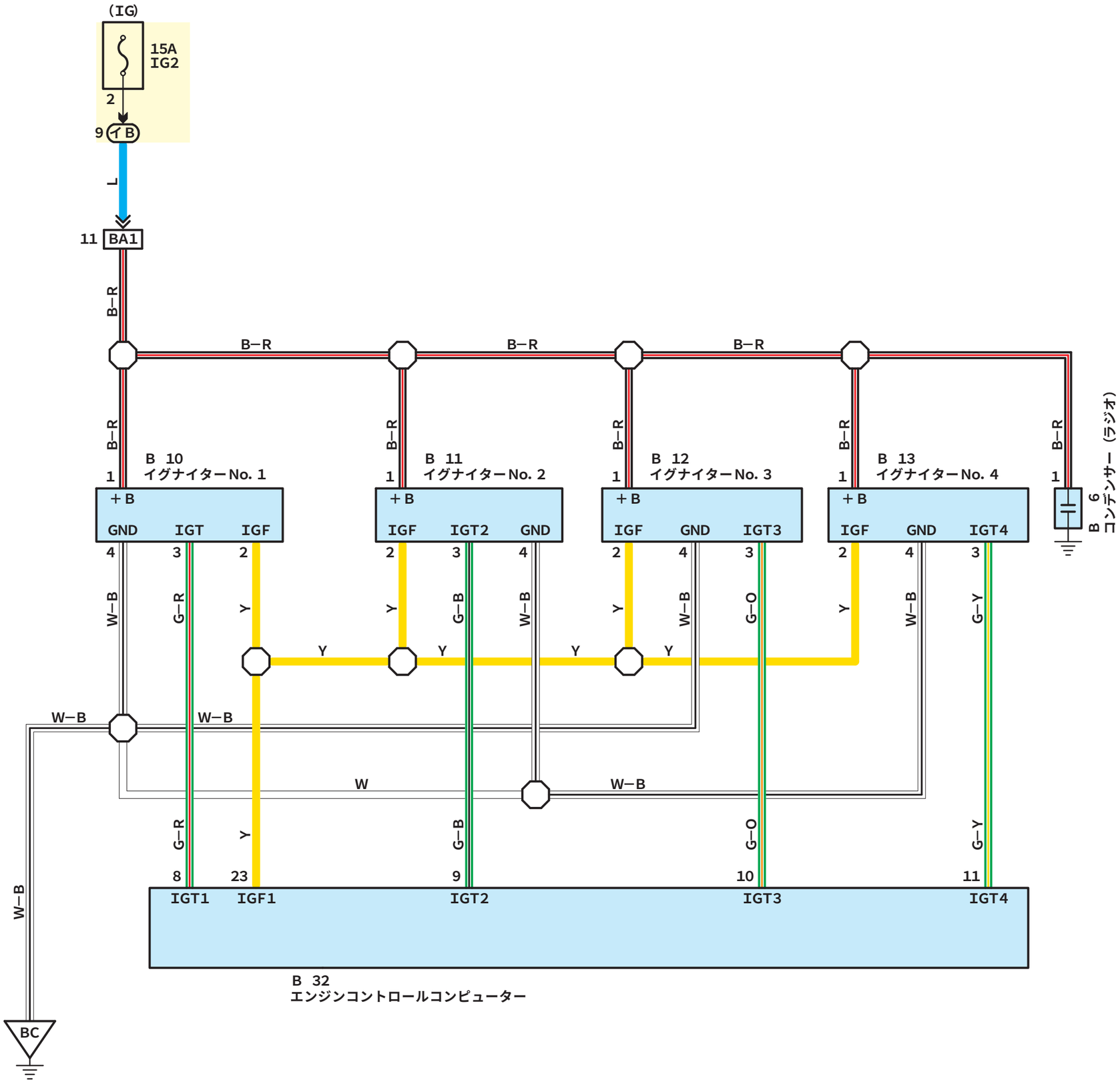

hs00q004
x325s0305000023