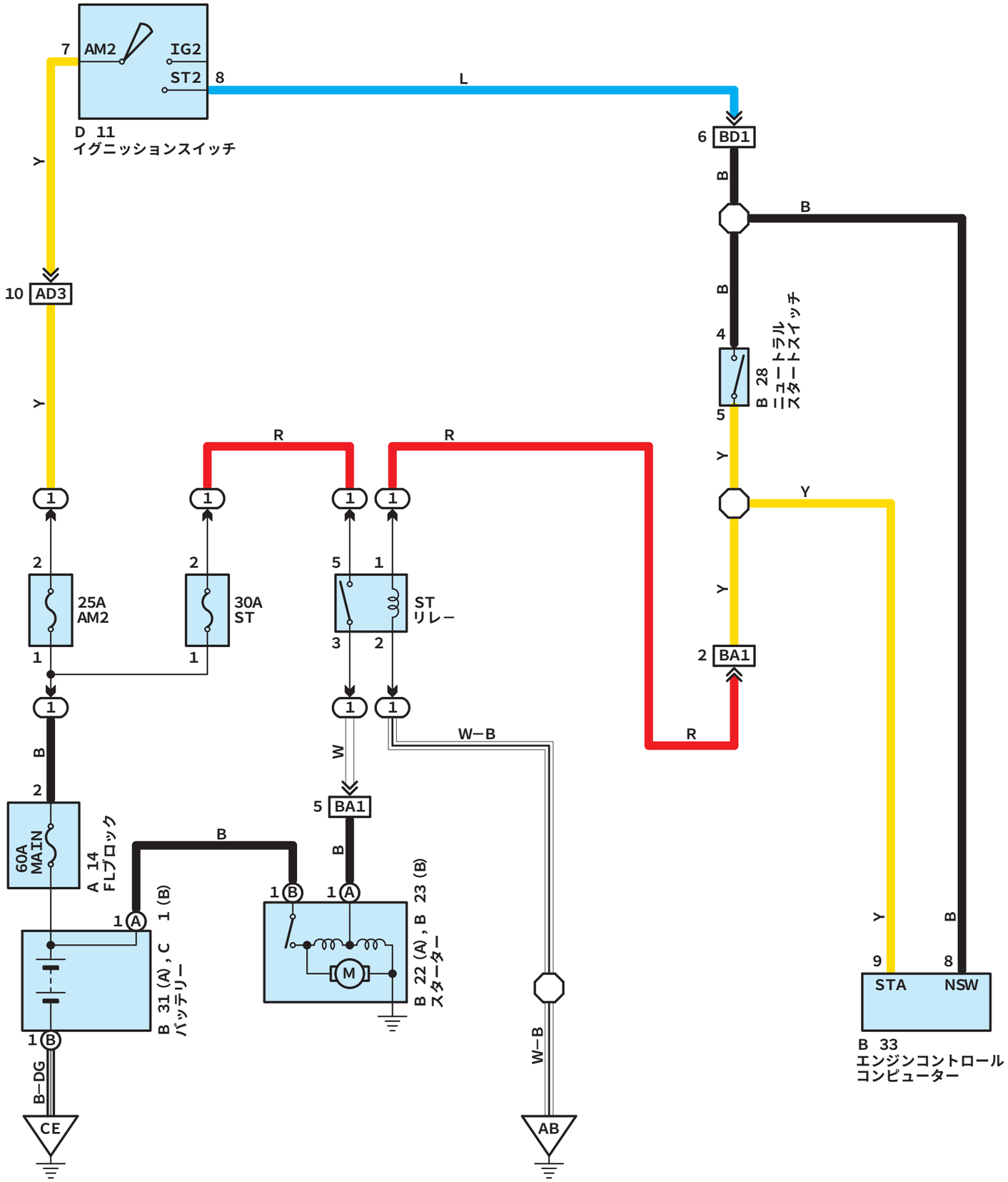

hs00q003
x325s0305000053